PUBLISHED: 28-APR-2017
2017.0 DISCOVERY (LR), 308-07

TRANSFER CASE - [+] TWIN SPEED TRANSFER CASE

TRANSFER CASE CONNECTING SLEEVE SEALS (G2006984)

REMOVAL AND INSTALLATION

transmissionmanuals.com

SPECIAL TOOL(S)



100-012

Slide Hammer



100-012-01

Slide Hammer Adapter

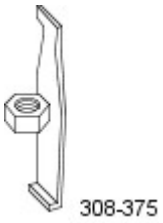

308-375

Remover, Input and Output Seal



308-598

Installer, Oil Seal

transmissionmanuals.com

PART(S)

STEP	PART NAME	QUANTITY
Installation Step 1	Transfer case input shaft oil seal	1

REMOVAL

NOTE:

- Some variation in the illustrations may occur, but the essential information is always correct.
- Some components shown removed for clarity.

1. Disconnect the battery ground cable.
Refer to: Specifications (414-00 Battery and Charging System - General Information, Specifications).

2. **WARNING:**

Make sure to support the vehicle with axle stands.

Raise and support the vehicle.

3. Remove the transfer case.
Refer to: Transfer Case - V6 S/C 3.0L Petrol (308-07 Transfer Case - Vehicles With: Twin Speed Transfer Case, Removal).
Refer to: Transfer Case - TDV6 3.0L Diesel (308-07 Transfer Case - Vehicles With: Twin Speed Transfer Case, Removal).
Refer to: Transfer Case - INGENIUM I4 2.0L Diesel (308-07 Transfer Case - Vehicles With: Twin Speed Transfer Case, Removal).

transmissionmanuals.com

4.

CAUTION:

Care must be taken to avoid damage to the seal register and running surface.

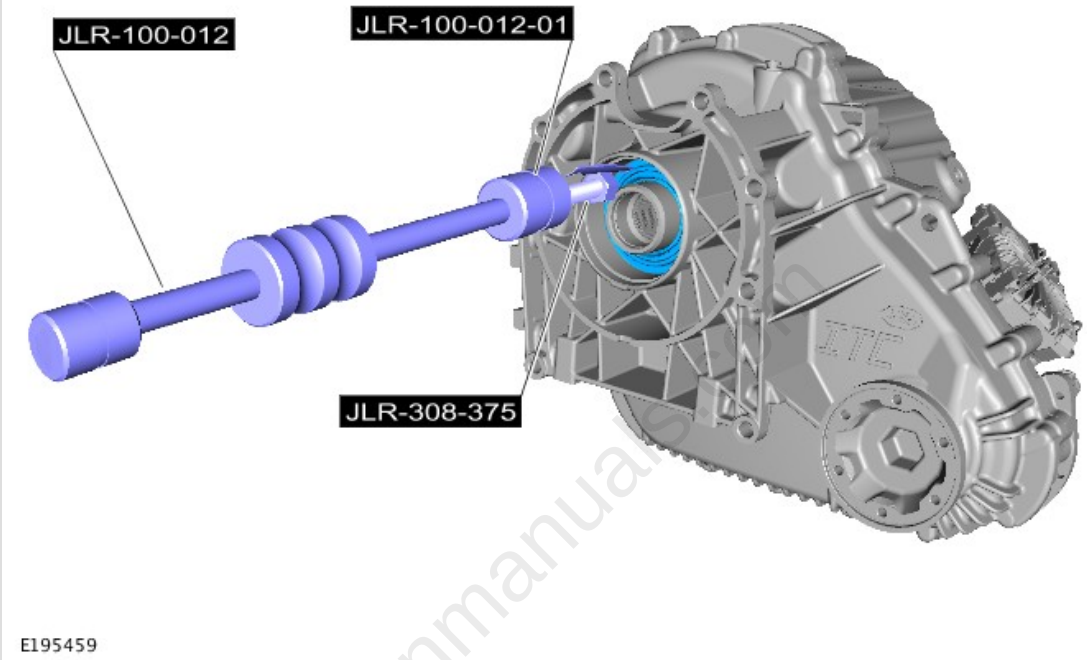

Carefully remove and discard the oil seal.
Special Tool(s): 100-012 , 100-012-01 , 308-375

INSTALLATION

transmissionmanuals.com

1.

CAUTION:

Oil seals must be installed dry.

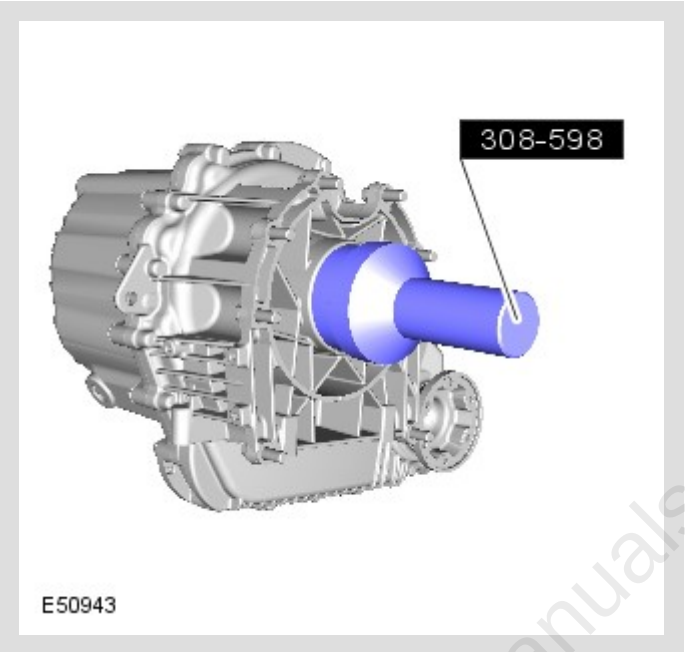

- Clean the seal register.
- Install the new oil seal.
  Renew Part: *Transfer case input shaft oil seal* *Quantity:* *1* .
- Use the special tool.
  Special Tool(s): 308-598

2. Install the transfer case.
Refer to: Transfer Case - V6 S/C 3.0L Petrol (308-07 Transfer Case - Vehicles With: Twin Speed Transfer Case, Installation).
Refer to: Transfer Case - TDV6 3.0L Diesel (308-07 Transfer Case - Vehicles With: Twin Speed Transfer Case, Installation).
Refer to: Transfer Case - INGENIUM I4 2.0L Diesel (308-07 Transfer Case - Vehicles With: Twin Speed Transfer Case, Installation).

3. Connect the battery ground cable.
Refer to: Specifications (414-00 Battery and Charging System - General Information, Specifications).

transmissionmanuals.com

transmissionmanuals.com